PRODUCT DATA SHEET

Curtain element GKF 12,5 mm single track
2000 x 170 mm
Item no. 57230

Status: 16.11.2026 | 16:11

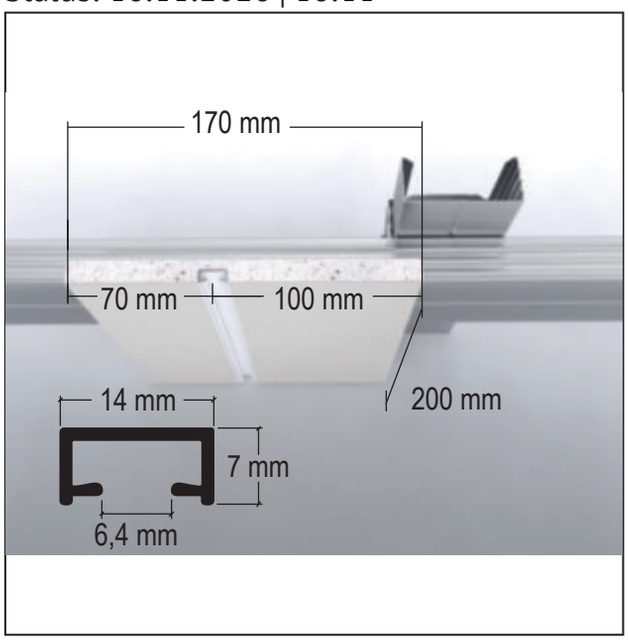

Designation	Curtain element GKF 12,5 mm single track 2000 x 170 mm
Description	Plasterboard with integrated white VS57 curtain profile, single track. Protective cover included. Edge distance: 70 / 100 mm
Product area	Dry lining
Product category	Moulded parts
Customs tariff number	68091100
Opened label	Purchase also possible as a single item:

Item number	Length (cm)	Material	Packaging unit
119547	200.00	Gypsum board with aluminium	10 PCE / 4 BUN

This product data sheet corresponds to the current state of development of our products and loses its validity upon publication of a new edition. Make sure you are using the latest edition of this information. Warranty and liability are based on delivery according to our general. Terms and conditions. Please observe the application assembly and storage guidelines.

All statements without guarantee. Reserve technical changes. Product illustrations may differ from the delivery product. Tender specifications, installation instructions and performance declarations (if required by law) can be found on our homepage. Please respect the environment for a proper disposal!